W19IH7T-0FM3 Wide 19" Panel PC (Intel® 4th Generation Core™ i5 Platform)

Mechanical Design

Open Frame

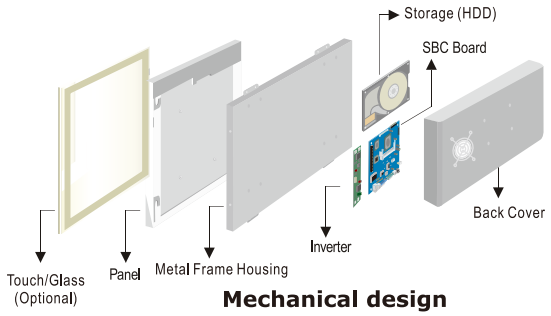

Mechanical design

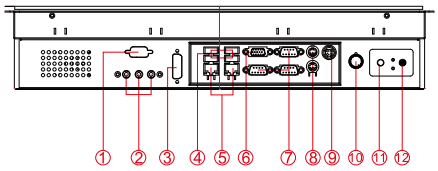

1. RS-232 Conn. (Optional)
2. Audio Jack
3. DVI (Optional)
4. USB
5. LAN
6. VGA
7. RS-232 Conn.
8. PS/2
9. DC-in Power
10. Brightness Adjustment Knob
11. Power On Button
12. Power Reset Button

Fully Integrated I/O

Dimensions

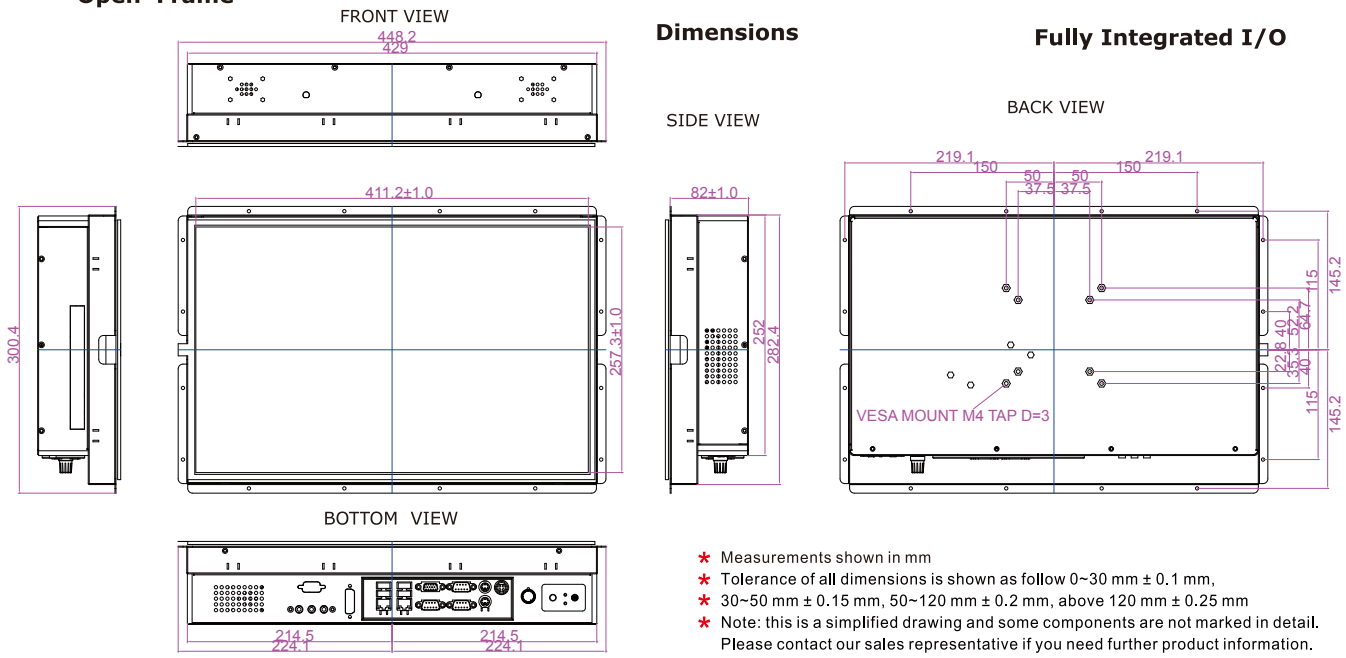

* Measurements shown in mm
* Tolerance of all dimensions is shown as follow 0~30 mm ± 0.1 mm,
* 30~50 mm ± 0.15 mm, 50~120 mm ± 0.2 mm, above 120 mm ± 0.25 mm
* Note: this is a simplified drawing and some components are not marked in detail. Please contact our sales representative if you need further product information.

Specifications

System:

- CPU : Intel® 4th Generation Core™ i5
- Memory Slot : 2 x SO-DIMM, Max 16GB DDR3L 1333/1600
- System Chipset : Intel® QM87 Chipset
- IDE/SATA : 2XSATA III
- LAN : Intel® Ethernet Controller I211-AT + Intel® Gigabit Ethernet PHY I218-LM
- Audio Codec : Realtek ALC886 HD Audio Codec

Input / Output :

- Serial Ports : 2 x RS232, 1 x RS232/422/485
- USB Ports : 4 x USB 3.0
- Keyboard / Mouse : 2 x PS/2
- Ethernet : 2 x RJ 45-10/100/1000 Mbps
- VGA : 1 x VGA (female)
- Audio : Line-Out, Line-In, Mic in

Default setting:RS232

Expansion Slot :

- 2 x Mini PCIe (1 for WiFi, 1 for 3G Module), 1 x PCI

* A customized housing is needed if you would like to have the PCI expansion.

Power Specifications :

- Power Input : 12V DC IN (Lockable Power Jack)
- Power Consumption : 60W (typ.)(Max.backlight & high CPU load)

Accessories :

- External Adapter : 110~230V Ac-in Power Adapter

Panel Spec :

- Size/Type : 19" Wide (16:10)
- Resolutions : 1440 x 900
- Brightness : 250 cd/m² (typ.)
- Contrast Ratio : 1000 : 1(typ.)
- Viewing Angle : -85~85(H);-80~80(V)
- Max. Colors : 16.7M (8 bits/colors)

Environment Considerations :

- Operating Temperature : 0 deg.C to 45 deg.C
- Operating Humidity : 30% to 90% (non condensing)

OS BSP / Driver Support :

- Support Windows 7 / Windows 8embedded

Order Options :

Mechanical : Open Frame
Touch : 5 Wires Resistive(Optional)

(A customized housing is needed if you have demands of SAW/IR/SC touch)

Storage : 2.5"SSD/HDD
RAM : DDR3L 1333/1600 MAX 16GB
OS : Windows 7 / Windows 8 embedded

Rev.	Reasons	Revised Date
1.0	Firstrelease	Jul-16-14
1.1	Spec change	Jul-21-2014

Note: All Specifications are subject to change without prior notice!

Revised Date:07/21/2014